Manufacturer's CLS Product Information

This form is available in a Microsoft Word version from the ENA's website.

G100/2 - Form B - Compliance Verification Report for Customer Export or Import Limitation Schemes

This form shall be used by the **Manufacturer** to demonstrate and declare compliance with the requirements of EREC G100. The form can be used in a variety of ways as detailed below:

1. For **Fully Type Tested** status

   The **Manufacturer** can use this form to obtain **Fully Type Tested** status for a **CLS** by registering this completed form with the Energy Networks Association (ENA) Type Test Register.

2. To obtain **Type Tested** status for a product

   The **Manufacturer** can use this form to obtain **Type Tested** status for one or more **Components** which are used in a **CLS** by registering this form with the relevant parts completed with the Energy Networks Association (ENA) Type Test Register.

3. One-off Installation

   The **Installer** can use this form to confirm that the **CLS** has been tested to satisfy the requirements of this EREC G100. This form shall be submitted to the **DNO** before commissioning.

A combination of (2) and (3) can be used as required, together with Form C where compliance of the **CLS** is to be demonstrated on site.

Note:

If the **CLS** is **Fully Type Tested** and registered with the Energy Networks Association (ENA) Type Test Register, Form C shall include the **Manufacturer**'s reference number (the Type Test Register system reference), and this form does not need to be submitted.

Where the **CLS** is not registered with the ENA Type Test Register or is not **Fully Type Tested** this form (all or in parts as applicable) shall be completed and provided to the **DNO**, to confirm that the **CLS** has been tested to satisfy all or part of the requirements of this EREC G100.

CLS Designation			
Manufacturer name		FOXESS CO., LTD.	
Address		No.939, Jinhai Third Road, New Airport Industry Area, Longwan District, Wenzhou, Zhejiang, China	
Tel	0510-68092998	Web site	www.fox-ess.com
Email	foxrd@fox-ess.com		
Installer's name			
Address			
Tel		Web site	
Email			

Export/Import capabilities			
Export	**Y**	Import	**Y**

Description of Operation

EREC G100 section 4.2 requires a description of the **CLS**, and schematic diagram, to be provided to the **Customer**. Please provide that description and the diagram here.

The FOXESS CLS solution is an end to end energy management solution, which consists of monitoring meter, hybrid converter, FOXESS APP and protection circuits such as fuse or breaker.

FOXESS CLS Controls & Settings

1. **FOXESS Monitoring Meter:** The export/import current data is sampled in real-time by the monitoring meter. The CLS system ensures that all the potential import/ export energy flows are captured and self-controlled within the required DNO requirements (import/export limit).
2. **FOXESS Control Response Times:** The FOXESS CLS response time are compliant to the G100 2nd amendment time harmonization requirement fixes and will tether the applicable import / export elements to ensure no excursion into State 2 is greater than 60 seconds.
3. **FOXESS State 1, 2 & 3:** FOXESS's solution meets the requirements (timing and allowable number of excursions) for state 1, 2 and 3 requirements, as mentioned in the G100 2nd amendment policy.
4. **FOXESS Interrogation & Data:** FOXESS's solution captures all control, power and current data which is presented in real-time via an HMI (Human Machine Interface) both on site and off site which enables multi-tier extensive data interrogation (by either installer or manufacturer).

State 1: normal operation
The hybrid converter interacts with the data sampled by the monitoring meter and the system regulates itself to ensure that the output or inlet data is within the required range.

State 2: Occasional Excursion
When the device enters state 2 due to load or other reasons, the inverter is quickly adjusted to return to state 1 within 60 seconds.

State 3: Failed State
When the communication line is interrupted, the control unit loses power or the grid voltage is greater than 257.6V for 60s, etc., the system will stop output within 15s until the installer or fabricator confirms the operating environment of the equipment meets the requirements and then restarts operation.

Customer connection scheme

System schematic

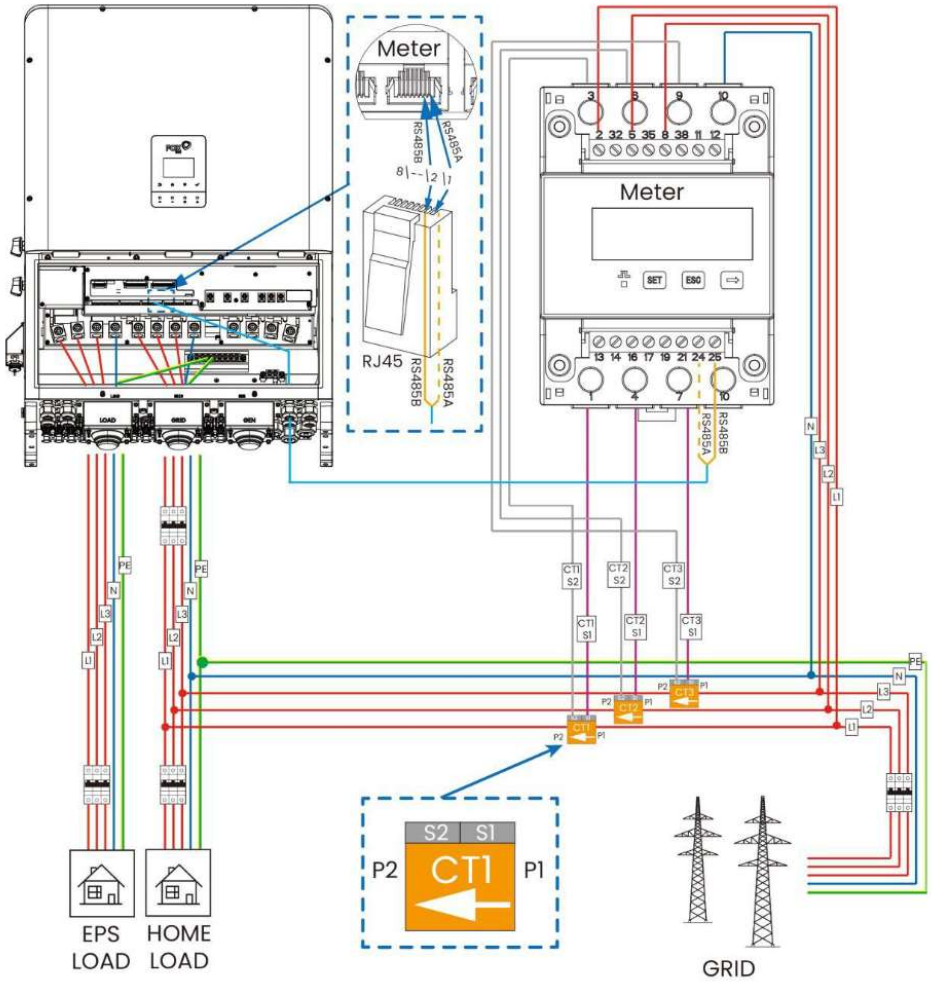

No.	Product type	Product number
1	Hybrid converter	H3-80-Plus
2	Monitoring meter	CHINT DTSU666+CT

Communications Media

Document the provisions made for the use of various communication media, and both the inherent characteristics and the design steps made to ensure security and reliability.

The FOXESS's solution CLS Internal communications: All the components of the CLS as part of the solution use the following:

1. FOXESS's solution CLS Internal Communications: All the component parts within the Solution: CLS system use a combination of:
    a. H3-80-Plus
    b. Hard-wired serial dedicated protocol (over RS485)
    c. Hard-wired dedicated CHINT DTSU666+CT
2. Local/remote Network Communications: All units that complete the CLS system are connected via hard-wired and dedicated communication cables (Ethernet RJ45). No 3rd party equipment is connected to this device to ensure that the system is a ring-fenced network.

Cyber Security

Confirm that the **Manufacturer** or **Installer** of the **CLS** has provided a statement describing how the **CLS** has been designed to comply with cyber security requirements, as detailed in section 4.7.
We FOXESS CO., LTD declare that G100 certified products, And the variant models to be included in the certification, Are in compliance with Cyber security requirements in accordance with the standards: • *ENA_EREC_G99_Issue_1* • *ENA_EREC_G98_Issue_1* • ETSI EN 303 645; • PAS 1879 “Energy smart appliances – Demand side response operation – Code of practice”; Please also refer to the documents provided (FOXESS Declaration _Cyber and Information Security).
Power Quality Requirements
Where the **EMS** includes the power electronics that controls generation or loads (as opposed to the power electronics being included in **Devices** that are subject to their own power quality compliance requirements) please submit the harmonic and disturbance information here as required by EREC G5 and EREC P28.
FOXESS CO., LTD confirms that FOXESS’s solution CLS comply with the relevant harmonic standards which has been tested for and for which relevant harmonic data has been provided as required for G98 and G99 testing (submitted to the ENA type test register) and including G5 and P28.

Fail Safe
CLS internal failure: please submit here the description of the internal **Fail-Safe** design and operation. Please also document how it has been demonstrated, including the non-volatile recording of times and numbers of state 2 operations, and confirm the overall response of the **CLS** to this internal failure.
Fail safe design and operation

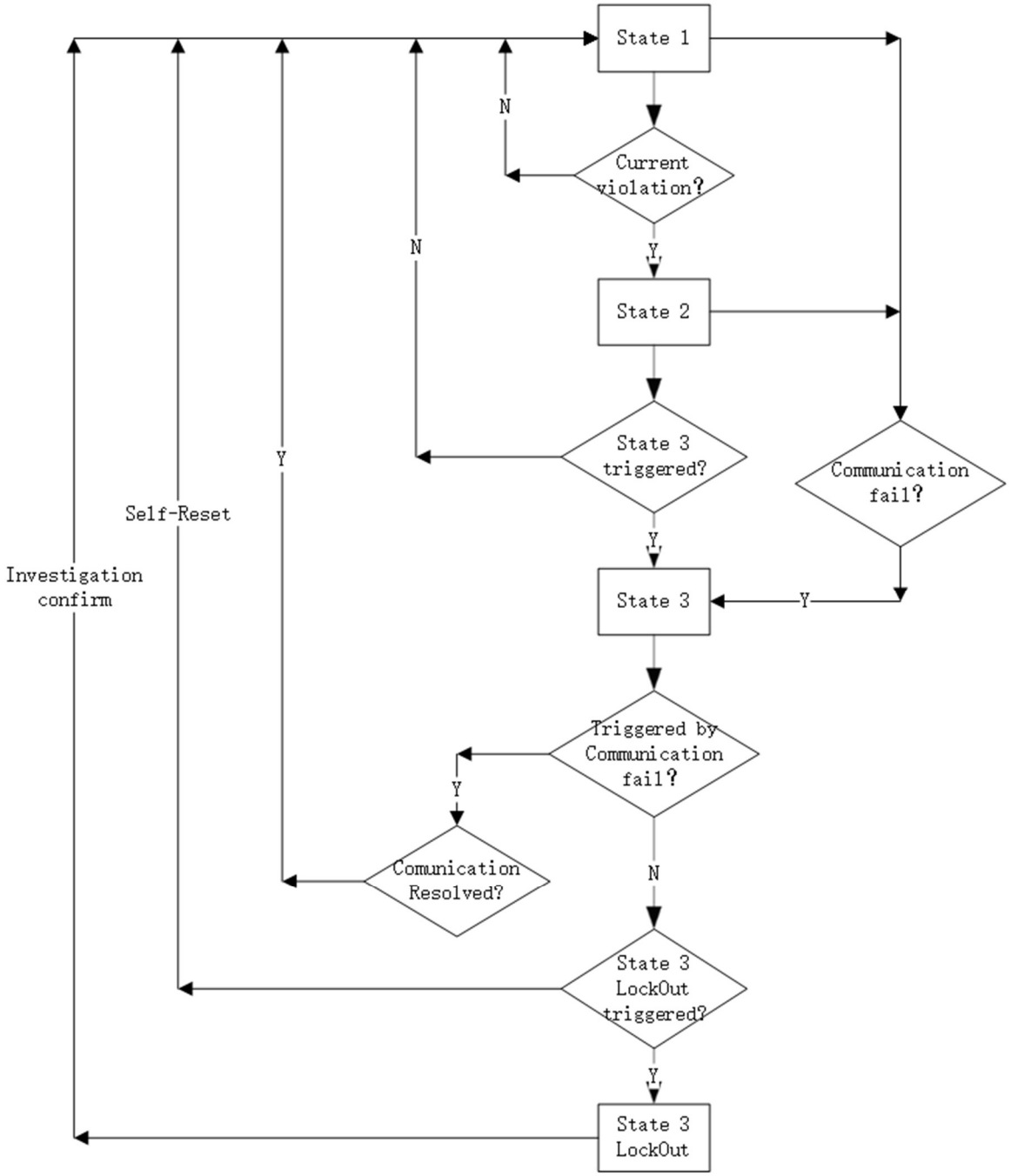

FOXESS G100 Fail Safe Compliance

FOXESS G100 CLS was designed with a fail-safe mechanism according to G100 section 4.5.
Therefore, the FOXESS system design ensures that it will limit the imported/exported current at the site to the DNO's agreed limit(s).
All the components in the FOXESS system are either wired or wireless and are registered by the CLS.
At the commissioning process the device is registered as a generation/non generation device.
In the event of a detected failure the system will operate the Fail-safe mechanism by reducing the inverter to zero immediately according to the table above.

Communication and power supply failures between **Components** and **Devices**. Please document here compliance with EREC G100 section 5.5.		
Component/Device number/description	Communication failure test	Power supply failure test
Monitoring meter	PASS	PASS
Hybrid converter	PASS	PASS
Communication cable	PASS	-

Operational Tests						
In accordance with EREC G100 section 5.6 undertake the tests A to B to confirm correct operation in state 1 and state 2, that transition into state 3 occurs as required, and that behaviour in state 3 is also as required.						
Test A						
Nominal Export Limit (for type tests this will be at maximum, minimum and one intermediate setting) in Amp:						20A
Nominal Import Limit (for type tests this will be at maximum, minimum and one intermediate setting) in Amp:						60A
No	Starting level	Step value	**CLS** registers change in level?	**CLS** and/or **Component** and/or **Device** initiates correct response of ≥ 5%?	Duration of step in test	Correct state 1/ state 2 operation
1	Below export limit (EL)	105% of EL	Yes. Correct power level shown and CLS allows system to sit in “state 2” state. State 2 Export excursion counter increases by 1	Yes	58s	state：1 > 2 > 1
2	Below export limit (EL)	110% of EL	Yes. See above.	Yes	58s	state：1 > 2 > 1
3	Below export limit (EL)	120% of EL	Yes. See above.	Yes	58s	state：1 > 2 > 1
Nominal Export Limit (for type tests this will be at maximum, minimum and one intermediate setting) in Amp:						60A
Nominal Import Limit (for type tests this will be at maximum, minimum and one intermediate setting) in Amp:						20A
4	Below Import limit (IL)	105% of IL	Yes. Correct power level shown and CLS allows system to sit in “state 2” state.	Yes	58s	state：1 > 2 > 1

			State 2 Import excursion counter increases by 1			
5	Below Import limit (IL)	110% of IL	Yes. See above.	Yes	58s	state：1 > 2 > 1
6	Below Import limit (IL)	120% of IL	Yes. See above.	Yes	58s	state：1 > 2 > 1

Test B						
Nominal Export Limit:						20A
Nominal Import Limit						20A
No	Starting level	Step value	**CLS** registers change in level?	**CLS** and/or **Component** and/or **Device** initiates correct response of ≥ 5%?	Duration of step in test	Correct state 3 operation
7	Below export limit (EL)	105 % of EL	Yes. Correct power level shown and CLS allows system to sit in “state 2” state until 62 seconds when system reduces the inverter to zero and enters “State 3”. State 2 Export excursion counter increases by 1. State 2 Export trip counter increases by 1 State 3 counter increases by 1	Yes	62s	state：1 > 2 > 3
8	Below import limit (IL)	105 % of IL	Yes. Correct power level shown and CLS allows system to sit in “state 2” state until 62 seconds when system reduces the inverter to zero and enters “state 3”. State 2 Import excursion counter increases by 1. State 2 Import trip counter increases by 1 State 3 counter increases by 1	Yes	62s	state：1 > 2 > 3

Test C						
Nominal Voltage						V=Vn
No	Starting voltage	Step value	**CLS** registers change in voltage?	**CLS** and/or **Component** and/or **Device** initiates correct response?	Duration of step in test	Correct state operation
9	100%Vn	112 %Vn	Yes. Correct voltage level shown and CLS allows system to sit at voltage level for stated duration. Overvoltage excursion counter increases by 1 to show that voltage has exceeded limit yet not tripped.	Yes	58s	state：1>2 >1
10	100%Vn	112 %Vn	Yes. Correct voltage level shown and CLS allows system to sit in “state 2” state until 62 seconds when system reduces the inverter to zero and enters “state 3”. Overvolatge excursion counter increases by 1. Overvolatge state 2 trip counter increases by 1 State 3 counter increases by 1	Yes	62s	state：1>2 >3

Test D						
Nominal Voltage						V=Vn
No	Starting voltage	Step value	**CLS** registers change in voltage?	**CLS** and/or **Component** and/or **Device** initiates correct response?	Duration of step in test	Correct state operation
11	100%Vn	87% Vn	Yes. Correct voltage level shown and CLS allows system to sit at voltage level for stated duration. Undervoltage excursion counter increases by 1 to show that voltage has gone below limit yet not tripped.	Yes	58s	state：1>2 >1
12	100%Vn	87% Vn	Yes. Correct voltage level shown and CLS allows system to sit in “state 2” state until 62 seconds when system reduces the inverter to zero and enters state 3. Undervolatge excursion counter increases by 1. Undervolatge state 2 trip counter increases by 1 State 3 counter increases by 1	Yes	62s	state：1>2 >3

State 3 Reset
These tests are to demonstrate compliance with section EREC G100 4.5.2. Please document how the reset from state 3 to state 1 has been demonstrated. Please include how the reset is achieved. Please confirm that for **CLSs** to be installed in **Domestic installations** three (3) resets causes lockout or that for non-domestic installations lockout can only be reset after four hours. Please explain how lockout is reset.
1. “State 3” is triggered, then the system will show “State 3” on the main metering HMI.it can be reset by the user 2. After 3 times reset by the user, System state “State 3 Lockout” will be triggered. 3. Expert investigation has ended successfully. 4. CLS changes system state to "State 1 " and sends commands to Generation devices. 5. CLS Clears all G100 related events from its memory due to investigations. 6. Devices receive the command and enter their Normal Operational Mode. 7. CLS logs the state change. 8. CLS sends and alert to a User Interface that the system is in "State 1”.